BOMBAY

1883404
A/C Sleigh Bed Nightstand
Parts and Hardware List

A.	Top	1 pc
B.	Right Side Panel	1 pc
C.	Left Side Panel	1 pc
D.	Base	1 pc
E	Back Panel	1 pc
F.	Door	1 pc
G.	Adjustable Shelves	2 pcs
H.	Shelf Supports	8 pcs
I.	Barrel Nuts	4 pcs
J.	Phillips Head Bolts	8 pcs
K.	Lock Washers	8 pcs
L.	Flat Washers	8 pcs
M.	Phillips Head Screwdriver	1 pc
N.	Flat Head Screwdriver	1 pc
O.	Pan Head Screws	12 pcs
P.	Flat Head Screws	4 pcs
Q.	Machine Screws	2 pcs
R.	Cast Pulls	2 pcs
S.	Drawer	1 pc
T.	Wood Dowels	2 pcs

∗ Please make sure that you have all the parts and hardware indicated above before you begin assembly of this item.
∗ Use the hardware Illustration to determine correct piece and size.
∗ This item should be assembled on a soft surface to prevent scratching the finish during assembly.
∗ This item may require periodic tightening.

1883404
A/C Sleigh Bed Nightstand

Hardware Illustrations

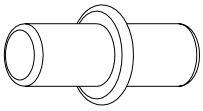

H. Shelf Support

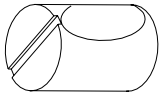

I. Barrel Nut

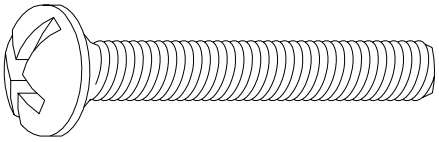

J. Phillips Head Bolt

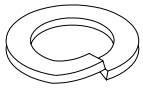

K. Lock Washer

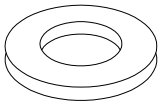

L. Flat Washer

O. Pan Head Screw

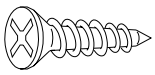

P. Flat Head Screw

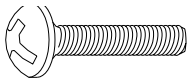

Q. Machine Screw

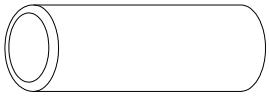

T. Wood Dowel

1883404
A/C Sleigh Bed Nightstand
Attach Side Panel & Top

Parts required

A.	Top	1 pc	J.	Phillips Head Bolts	8 pcs
B.	Right Side Panel	1 pc	K.	Lock Washers	8 pcs
C.	Left Side Panel	1 pc	L.	Flat Washers	8 pcs
D.	Base	1 pc	M.	Phillips Head Screwdriver	1 pc
I.	Barrel Nuts	4 pcs	N.	Flat Head Screwdriver	1 pc

1. **Attach Side Panel (B&C).** Insert the Barrel Nuts (I) into the pre-drilled holes of Side Panel (B&C) Align the pre-drilled hole in the side of Side Panel (B&C) with the holes of Barrel Nuts (I) using Flat Head Screwdriver (N). Turn the Base (D) on it's side. Insert the wood dowel of Side Panel (B&C) into the pri-drilled holes in the Base (D), so that the pre-drilled holes of Side Panel (B&C) align with the pre-drilled holes in the Base (D), secure with Phillips Head Bolts (J), Lock Washers (K) and Flat Wshers (L) using Phillips Head Screwdriver (M). Refer to Illustration #1
2. **Attach Top (A).** Place the Top (A) over the Side Panel (B&C), insert the wood dowels into the pre-drilled holes of Top (A) so that the pre-drilled holes in the block of Side Panel (B&C) align with the pre-drilled holes in the Top (A), secure with Phillips Head Bolts (J), Lock Washers (K) and Flat Washers (L) using Phillips Head Screwdriver (M). Refer to Illustration 1.

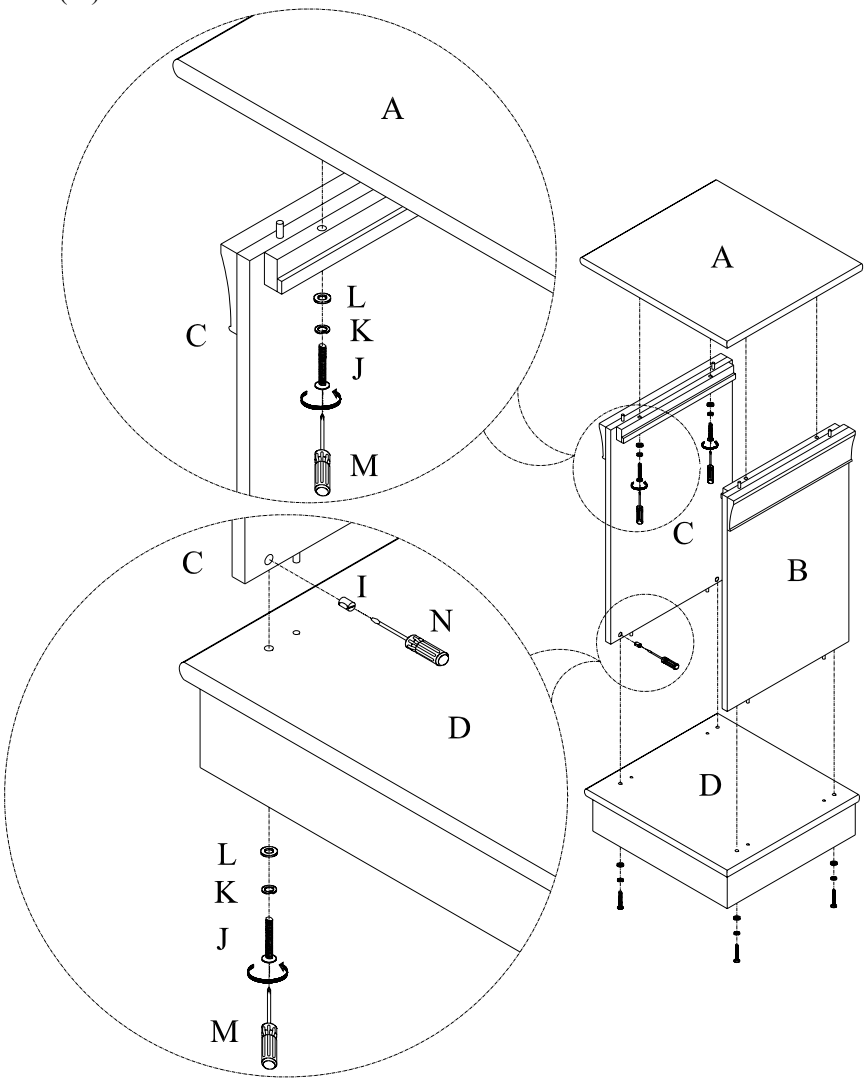

Illustration # 1

1883404
A/C Sleigh Bed Nightstand
Attach Back Panel

Parts required

A.	Top	1 pc	E.	Back Panel	1 pc
B.	Right Side Panel	1 pc	M	Phillips Head Screwdriver	1 pc
C.	Left Side Panel	1 pc	O.	Pan Head Screws	12 pcs
D.	Base	1 pc			

3. **Attach Back Panel (E).** Place the Back Panel (E) into the notched edge of the Side Panel (B&C), Top (A) and Base (D), secure in place with the Pan Head Screws (O) using Phillips Head Screwdriver (M). Refer to Illustration #2

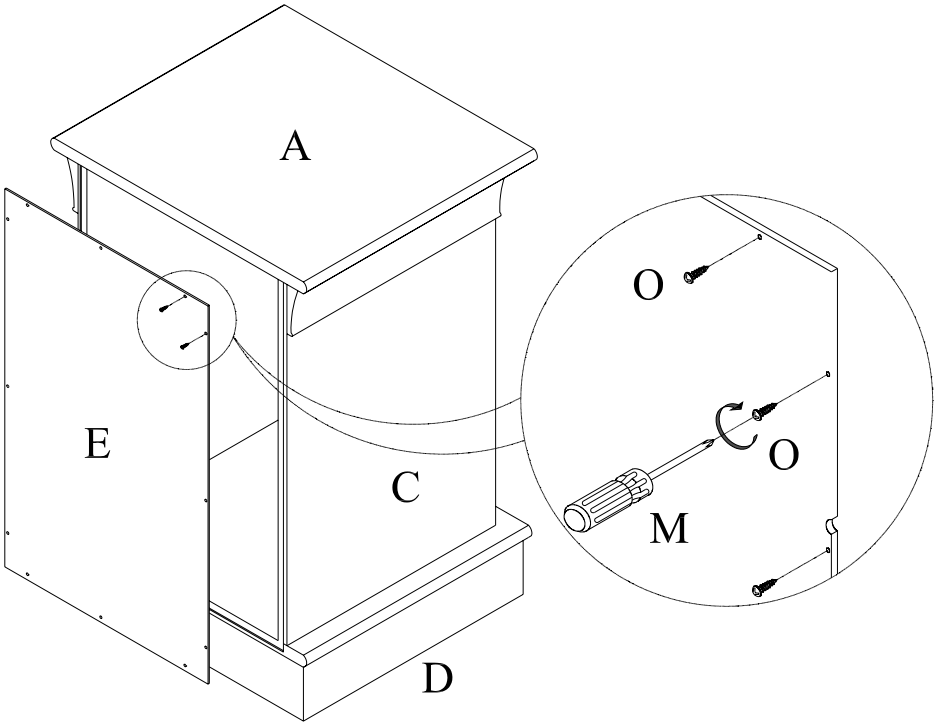

Illustration # 2

1883404
A/C Sleigh Bed Nightstand
Attach Door & Adjustable Shelves

Parts required

A.	Top	1 pc	H.	Shelf Supports	8 pcs
B.	Right Side Panel	1 pc	P.	Flat Head Screws	4 pc
C.	Left Side Panel	1 pc	Q.	Machine Screw	2 pcs
F.	Door	1 pc	R.	Cast Pulls	2 pcs
G.	Adjustable Shelves	2 pcs	S.	Drawer	1 pc
M	Phillips Head Screwdriver	1 pc	T.	Wood Dowels	1 pc

4. **Attach Door (F).** Align the pre-drilled holes in the hinge of the Right Side Panel (B) with the pre-drilled holes of the Door (F), secure with Flat Head Screws (P) using Phillips Head Screwdriver (M). Refer to Illustration #3.
5. **Attach Cast Pulls (R)** Insert the Machine Screws (Q) through the pre-drilled hole of Door (H), secure into the pre-threaded holes in the Cast Pulls (R) using the Phillips Head Screwdriver (M). Repeat to attach the Cast Pull (R) to Drawer (S). Refer to Illustration #3
6. **Attach the Drawer (S).** Align the groove at side of Drawer (S) with the side rail of Side Panel (B&C). Insert the Drawer (S) into the compartment. Insert the Wood Dowels (T) into the hole in the side of Drawer (S). Refer to Illustration #3
7. **Attach Adjustable Shelves (G)** Insert the Shelf Supports (H) into the pre-drilled holes at desired location of Side Panel (B&C). Place the Adjustable Shelves (G) onto the Shelf Supports (H). Refer to Illustration #3

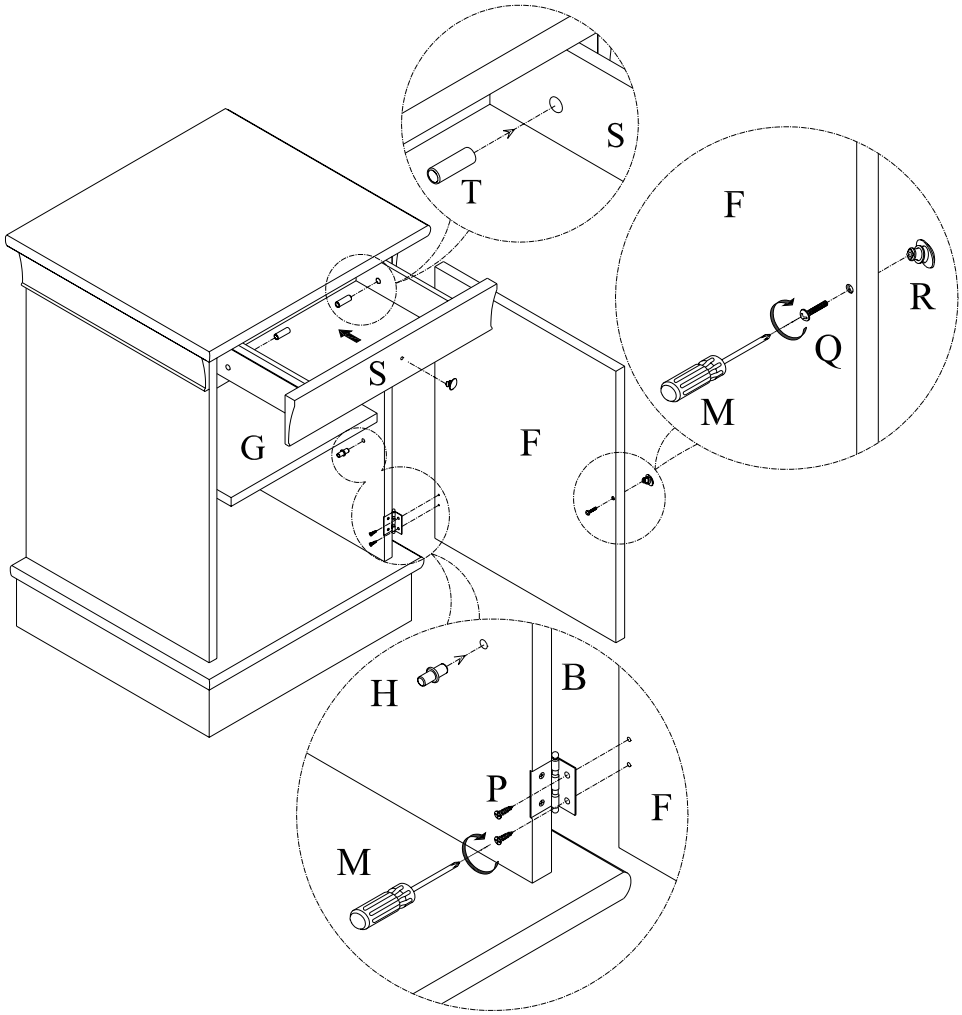

Illustration # 3